PPV - PPVZ - PPV80 - PPV60Z

Adjustable upper plate

For SINGLE-POINT, BENDING BEAM, SHEAR BEAM and COMPRESSION load cells

- Plates for constraint against lateral forces and anti-tilt.
- For self-centering joint foot.

Up to 5000 kg application range



PPV PPVZ PPV80 PPV60Z

MAX STATIC LOAD kg	MATERIAL	NET WEIGHT (kg)	MODEL
2000	AISI 304 stainless steel	0.2	PPV
2000	galvanized steel	0.2	PPVZ
5000	AISI 304 stainless steel	0.6	PPV80
5000	galvanized steel	0.6	PPV60Z

DIMENSIONS (mm)

PPV-PPVZ

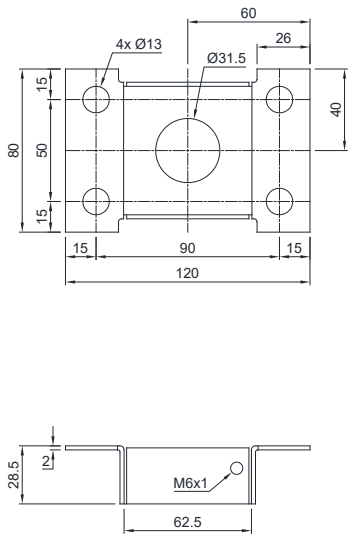

PPV80

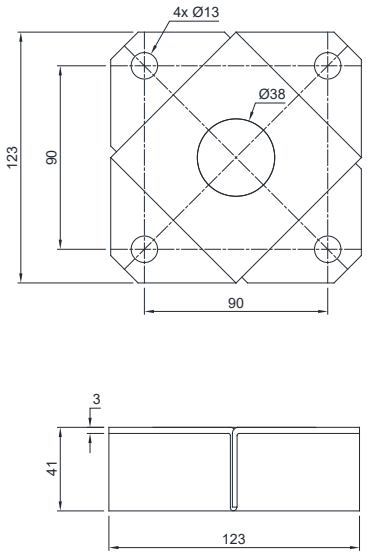

PPV60Z

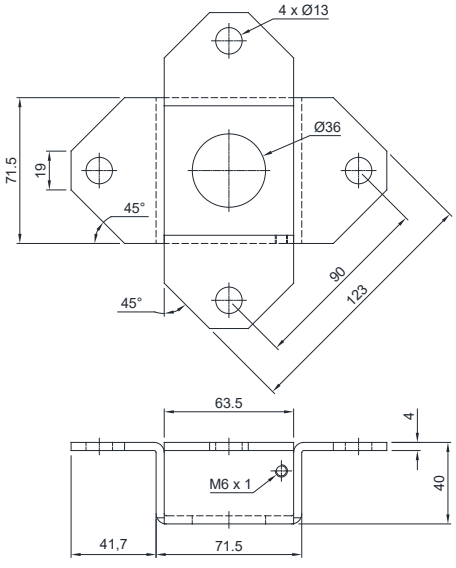

The Company reserves the right to make changes to the technical data, drawings and images without notice.

LAUMAS S.r.l.
Fax: (+39) 0521 681091
• SALES DEPARTMENT: sales@laumas.it
• Phone: (+39) 0521 683124

ISO 9001
ISO 14001