FTH

SHEAR BEAM LOAD CELLS FOR ON-BOARD VEHICLE WEIGHING

Manufactured according to OIML R60 standards

Capacity from 5000 kg to 10000 kg



- SPECIAL STEEL
- COMBINED ERROR ≤ ±0.1%
- IP68 PROTECTION RATING

CAPACITY	kg	NET WEIGHT (kg)
5000		15.5
10000		16.2

CERTIFICATIONS

Complies with the Eurasian Customs Union regulations

Equivalent of the CE marking for the United Kingdom

CERTIFICATIONS ON REQUEST
Calibration report
LAT Accredia calibration certificate ISO 376 or ASTM E74 for capacities from 1000 kg to 10000 kg
ATEX *(zone 2-22)*
Complies with the Eurasian Customs Union regulations for use in potentially explosive atmospheres
Complies with Chinese market regulations for use in potentially explosive atmospheres

FTH

SHEAR BEAM LOAD CELLS FOR ON-BOARD VEHICLE WEIGHING

LAUMAS®

DIMENSIONS (mm)

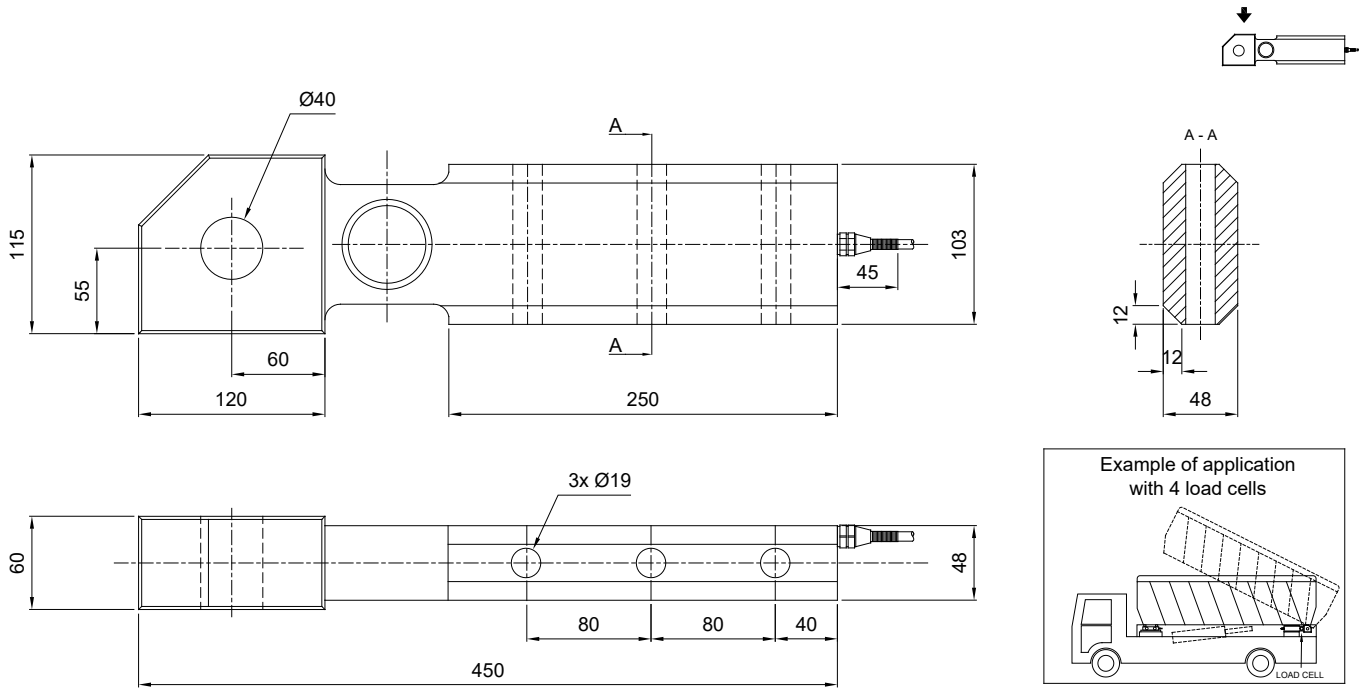

TECHNICAL FEATURES

Material	Special steel
Nominal load (E max)	5000 - 10000 kg
Combined error	≤ ±0.1%
Protection rating	IP68

Rated output	1 mV/V ±0.5%	Input resistance	400 Ω ±20
Temperature effect on zero	0.005% °C	Output resistance	352 Ω ±3
Temperature effect on span	0.005% °C	Zero balance	±2%
Compensated temperature range	-10 °C / +40 °C	Insulation resistance	>5000 MΩ
Operating temperature range	-30 °C / +70 °C	Safe overload (% of full scale)	150%
Creep at nominal load in 30 minutes	0.1%	Ultimate overload (% of full scale)	300%
Max supply voltage without damage	15 V	Deflection at nominal load	0.4 mm

ELECTRICAL CONNECTIONS

Cable length	10 m
Cable diameter	6 mm
Cores	6 x 0.24 mm²

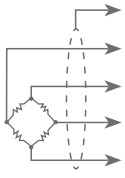

SHIELD	
+ SIGNAL	GREEN
+ EXCITATION + REF./SENSE	RED BLUE
- SIGNAL	WHITE
- EXCITATION - REF./SENSE	BLACK YELLOW

The Company reserves the right to make changes to the technical data, drawings and images without notice.

LAUMAS S.r.l.
Fax: (+39) 0521 681091
• SALES DEPARTMENT: sales@laumas.it
• Phone: (+39) 0521 683124

ISO 9001
ISO 14001

www.laumas.com