FT-P

SHEAR BEAM LOAD CELLS

LAUMAS®

Capacity from 300 kg to 2000 kg



- 17-4 PH STAINLESS STEEL
- COMBINED ERROR ≤ ±0.02%
- IP68 PROTECTION RATING

MOUNTING KITS



PV - PVZ



TFPS2000 series



T12FTAGP



TF500/2000 series

CAPACITY kg	ACCURACY CLASS C3	NET WEIGHT (kg)
300	•	0.8
500	•	0.9
1000	•	0.9
2000	•	0.9

CERTIFICATIONS

OIML R60 C3

Complies with the Eurasian Customs Union regulations

Equivalent of the CE marking for the United Kingdom

CERTIFICATIONS ON REQUEST

IP69K	Declaration of conformity + IP69K marking protection rating *Water protection in case of high-pressure or steam jet cleaning (test: pressurized water is sprayed from a distance of max 150 mm)* *Water pressure: 100 bar; temperature: 80 °C; test duration: 250 seconds (reference standard: DIN 40050-9)*
	Calibration report
	LAT Accredia calibration certificate ISO 376 or ASTM E74 for capacities from 1000 kg to 10000 kg
	ATEX *(zone 2-22)*
	ATEX *(zone 1-21)*
	IECEx *(zone 1-21)*
	Complies with the Eurasian Customs Union regulations for use in potentially explosive atmospheres
	Complies with Chinese market regulations for use in potentially explosive atmospheres

LAUMAS S.r.l.
Fax: (+39) 0521 681091
• SALES DEPARTMENT: sales@laumas.it
• Phone: (+39) 0521 683124

ISO 9001
ISO 14001

FT-P

SHEAR BEAM LOAD CELLS

LAUMAS®

DIMENSIONS (mm)

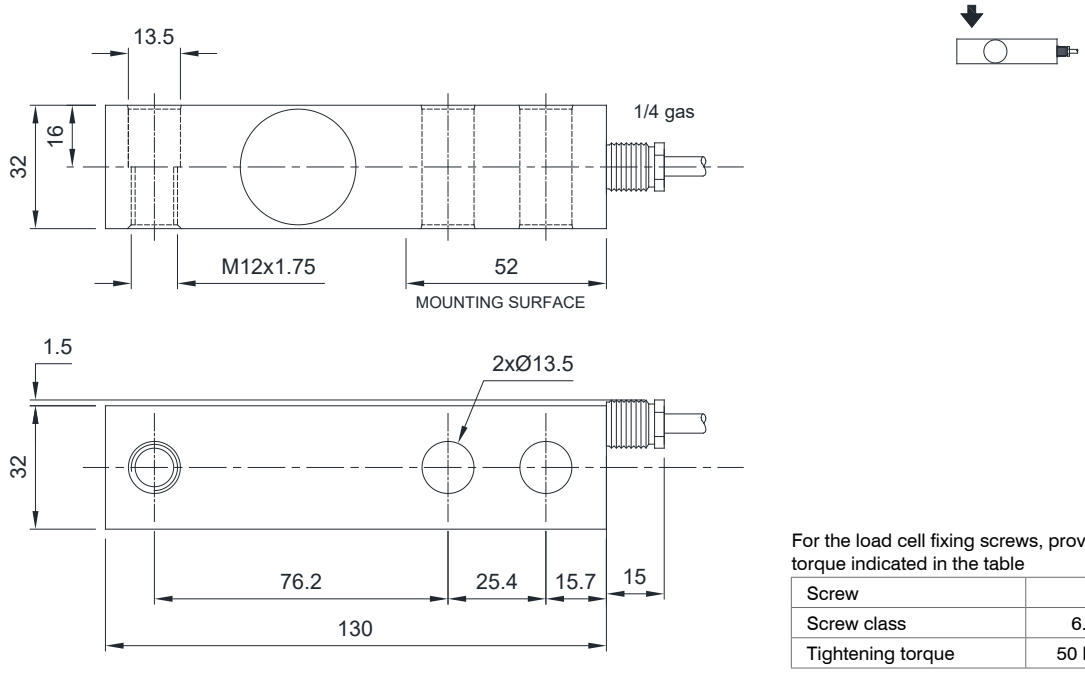

For the load cell fixing screws, provide the tightening torque indicated in the table

Screw	M12	
Screw class	6.8	8.8
Tightening torque	50 Nm	79 Nm

TECHNICAL FEATURES

Material	17-4 PH stainless steel
OIML R60 Accuracy class • Verification intervals	C3 • 3000
Nominal load (E max)	300 - 500 - 1000 - 2000 kg
Minimum verification interval (V min)	E max / 10000
Combined error	≤ ±0.02%
Protection rating	IP68

Rated output	2 mV/V ±0.4%	Input resistance	385 Ω ±10
Temperature effect on zero	0.002% °C	Output resistance	350 Ω ±3
Temperature effect on span	0.0012% °C	Zero balance	±2%
Compensated temperature range	-10 °C / +40 °C	Insulation resistance	>5000 MΩ
Operating temperature range	-20 °C / +70°C	Safe overload (% of full scale)	150%
Creep at nominal load in 30 minutes	0.016%	Ultimate overload (% of full scale)	200%
Max supply voltage without damage	15 V	Deflection at nominal load	0.4 mm

ELECTRICAL CONNECTIONS

Cable length	5 m
Cable diameter	5 mm
Cores	6 x 0.25 mm²

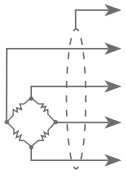

SHIELD	
+ SIGNAL	GREEN
+ EXCITATION + REF./SENSE	RED BLUE
- SIGNAL	WHITE
- EXCITATION - REF./SENSE	BLACK YELLOW

The Company reserves the right to make changes to the technical data, drawings and images without notice.

LAUMAS S.r.l. • SALES DEPARTMENT: sales@laumas.it
Fax: (+39) 0521 681091 • Phone: (+39) 0521 683124

ISO 9001
ISO 14001