CA
ANCHOR LOAD CELLS

Manufactured according to OIML R60 standards

Capacity from 30000 kg to 250000 kg



- 17-4 PH STAINLESS STEEL
- COMBINED ERROR ≤ ±0.1%
- IP68 PROTECTION RATING

CAPACITY kg	Ø INTERNAL	Ø EXTERNAL	NET WEIGHT (kg)
30000	50 mm	163 mm	5
50000	50 mm	163 mm	5
75000	50 mm	163 mm	5
50000	75 mm	163 mm	5
75000	75 mm	163 mm	5
75000	120 mm	229 mm	9
100000	120 mm	229 mm	9
125000	120 mm	229 mm	9
125000	165 mm	275 mm	14
150000	165 mm	275 mm	14
180000	165 mm	275 mm	14
180000	225 mm	320 mm	20
250000	225 mm	320 mm	20

CERTIFICATIONS

Complies with the Eurasian Customs Union regulations

Equivalent of the CE marking for the United Kingdom

CERTIFICATIONS ON REQUEST
Calibration report
ATEX *(zone 2-22)*
ATEX/IECEx *(zone 1-21)*
Complies with the Eurasian Customs Union regulations for use in potentially explosive atmospheres
Complies with Chinese market regulations for use in potentially explosive atmospheres

LAUMAS S.r.l.
Fax: (+39) 0521 681091
• SALES DEPARTMENT: sales@laumas.it
• Phone: (+39) 0521 683124

ISO 9001
ISO 14001

CA
ANCHOR LOAD CELLS

LAUMAS®

OPTIONS ON REQUEST

	DESCRIPTION
	Two redundant strain gauges Wheatstone bridges (350 Ω) with two output cables; for dual safety systems.

COMPLEMENTARY ACCESSORIES

	DESCRIPTION	MODEL
	Galvanized steel plates for load distribution.	PIAS

TECHNICAL FEATURES - DIMENSIONS

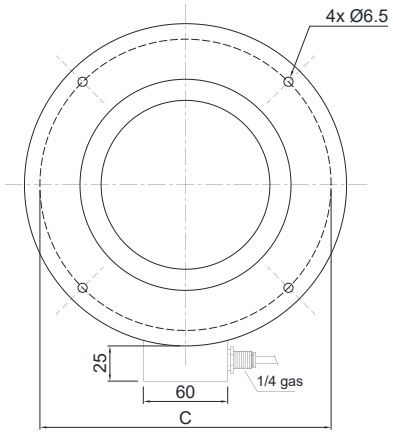

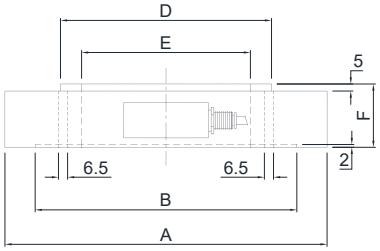



	30000 - 75000 kg	50000 - 75000 kg	75000 - 125000 kg	125000 - 180000 kg	180000 - 250000 kg
A	163	163	229	275	320
B	131.5	131.5	186.5	231	285
C	145	145	207	252	302
D	95	95	150	195	250
E	50	75	120	165	225
F	45	45	45	45	55
kg	5	5	9	14	20

Material	17-4 PH stainless steel
Nominal load (E max)	30000 - 50000 - 75000 - 100000 - 125000 - 150000 - 180000 - 250000 kg
Combined error	≤±0.1%
Protection rating	IP68

Rated output	2 mV/V ±0.1%	Input resistance	700 Ω ±20
Temperature effect on zero	0.005% °C	Output resistance	700 Ω ±5
Temperature effect on span	0.005% °C	Zero balance	±1%
Compensated temperature range	-20 °C / +70 °C	Insulation resistance	>5000 MΩ
Operating temperature range	-30 °C / +90 °C	Safe overload (% of full scale)	150%
Creep at nominal load in 30 minutes	0.03%	Ultimate overload (% of full scale)	300%
Max supply voltage without damage	15 V	Deflection at nominal load	0.4 mm

ELECTRICAL CONNECTIONS

Cable length	5 m
Cable diameter	5 mm
Cores	6 x 0.14 mm²

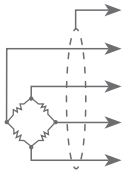

SHIELD	
+ SIGNAL	GREEN
+ EXCITATION + REF./SENSE	RED BLUE
- SIGNAL	WHITE
- EXCITATION - REF./SENSE	BLACK BROWN

The Company reserves the right to make changes to the technical data, drawings and images without notice.

LAUMAS S.r.l.
Fax: (+39) 0521 681091
• SALES DEPARTMENT: sales@laumas.it
• Phone: (+39) 0521 683124

ISO 9001
ISO 14001