DTER

DIGITAL CRANE SCALE

LAUMAS®

Capacity up to 5000 kg



DESCRIPTION

- Die-cast aluminum crane scale complete with upper shackle and lower swivel hook; suitable for bridge crane.
- 5-digit semi-alphanumeric red LED display (30 mm height).
- 6 signalling LED.
- IP64 protection rating.
- Brightness control.
- 6 V rechargeable internal battery, 3,2 Ah capacity (spare battery included).
- Operating time: 80 hours.
- External battery charger 230 VAC included.
- Remote control with range up to 10 m line of sight.

MAIN FUNCTIONS

- HOLD function (lock of the displayed weight).
- Number of weighed values and totalized weight value.
- Semi-automatic tare (net/gross weight) and preset tare.
- Weight zero setting.
- Tare weight zero setting.
- Storing of the number of overloadings.
- Reading division setting.
- Units of measure setting: kg - lb.
- Energy saving mode.
- Auto power-off.

CAPACITY kg	DIVISION (kg)	NET WEIGHT (kg)
3000	e=0.5	11.5
5000	e=1	15.5

CERTIFICATIONS

UK CA Equivalent of the CE marking for the United Kingdom

CERTIFICATIONS ON REQUEST

Calibration report

Rev. 0.0

LAUMAS S.r.l.
Fax: (+39) 0521 681091
• SALES DEPARTMENT: sales@laumas.it
• Phone: (+39) 0521 683124

ISO 9001
ISO 14001

www.laumas.com

DTER

DIGITAL CRANE SCALE

DIMENSIONS (mm)

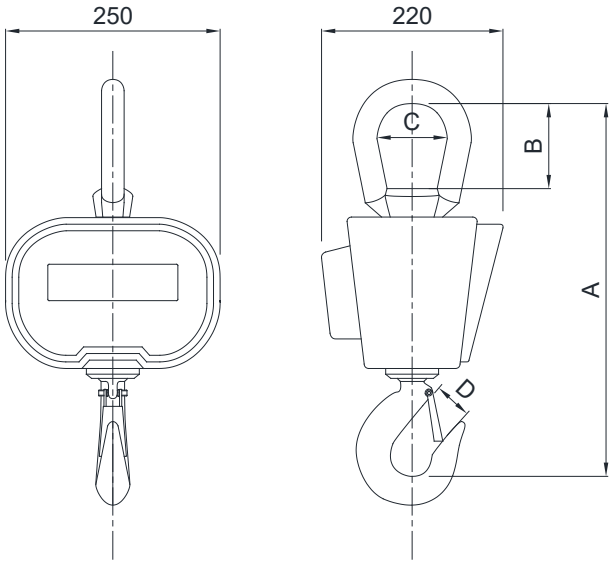

mm	3000 kg	5000 kg
A	420	480
B	100	115
C	70	85
D	35	40
Weight	11.5 kg	15 kg

TECHNICAL FEATURES

Accuracy class (% of full scale)	± 0.03%
Safe overload (% of full scale)	150%
Ultimate overload (% of full scale)	400%
Humidity (condensate free)	10÷90%
Working temperature	-10°C +40°C

Rev. 0.0

The Company reserves the right to make changes to the technical data, drawings and images without notice.

LAUMAS S.r.l.
Fax: (+39) 0521 681091
• SALES DEPARTMENT: sales@laumas.it
• Phone: (+39) 0521 683124

ISO 9001
ISO 14001

www.laumas.com