# LACSN

## BENCH COUNTING SCALES




| CAPACITY kg | DIVISION (g) | NET WEIGHT (kg) |
|---|---|---|
| 6 | e=0.2 | 2.8 |
| 15 | e=0.5 | 2.8 |
| 30 | e=1 | 2.8 |

### DESCRIPTION

- Stainless steel plate.
- 6-digit backlit LCD display (30 mm height).
- 8-key waterproof keyboard.
- Bubble level and adjustable feet.
- 4 V rechargeable internal battery, 4 Ah capacity.
- Operating time: 70 hours.
- External battery charger 230 VAC included.

### MAIN FUNCTIONS

- Weight indication.
- Piece counting.
- Weight indication as a percentage.
- RS232 output for connection to PC.
- Weight checking (HIGH/LOW) with acoustic alarm.

### CERTIFICATIONS

UK CA Equivalent of the CE marking for the United Kingdom

CERTIFICATIONS ON REQUEST

Calibration report

Rev. 0.0

LAUMAS S.r.l.
Fax: (+39) 0521 681091
• SALES DEPARTMENT: sales@laumas.it
• Phone: (+39) 0521 683124

# LACSN

## BENCH COUNTING SCALES

### DIMENSIONS (mm)

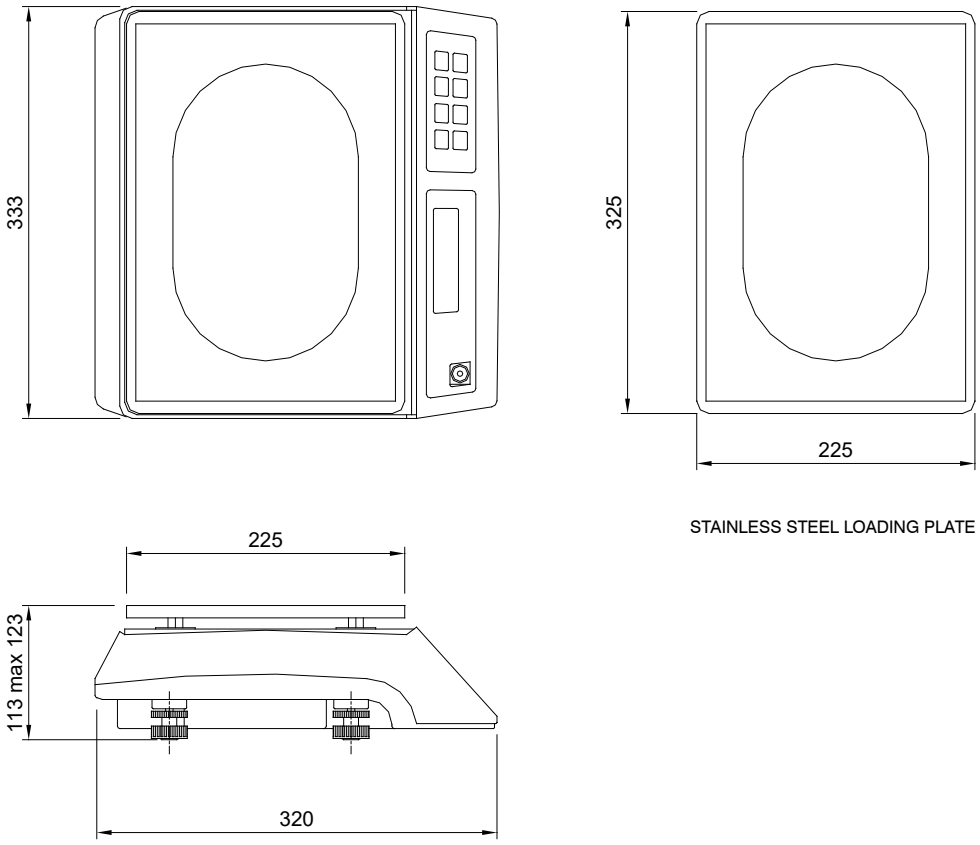


STAINLESS STEEL LOADING PLATE

### TECHNICAL FEATURES

| | |
|---|---|
| Power supply | 230 VAC ±10% |
| Internal battery | 4 V, 4 Ah capacity |
| Linearity | <0.01% full scale |
| Display resolution | 30000 |
| Units of measure | kg, lb |
| Serial port | RS232 |
| Baud rate | 1200, 2400, 4800, 9600 (bit/s) |
| Humidity (condensate free) | <85% |
| Storage temperature | -10 °C +50 °C |
| Working temperature | 0 °C +40 °C |

*The Company reserves the right to make changes to the technical data, drawings and images without notice.*



LAUMAS S.r.l. • SALES DEPARTMENT: sales@laumas.it
Fax: (+39) 0521 681091 • Phone: (+39) 0521 683124

ISO 9001
ISO 14001