# AU

## SINGLE-POINT LOAD CELL for platforms 250x400/400x600 mm

Manufactured according to OIML R60 standards

### Capacity from 3 kg to 50 kg



- ALUMINUM ALLOY
- COMBINED ERROR ≤ ±0.02%
- IP65 PROTECTION RATING

| CAPACITY | kg | PLATFORM (mm) | NET WEIGHT (kg) |
|---|---|---|---|
| 3 | | 250 x 400 | 0.5 |
| 6 | | 250 x 400 | 0.5 |
| 15 | | 250 x 400 | 0.5 |
| 30 | | 400 x 600 | 0.5 |
| 50 | | 400 x 600 | 0.5 |

### CERTIFICATIONS

Complies with the Eurasian Customs Union regulations

Equivalent of the CE marking for the United Kingdom

| CERTIFICATIONS ON REQUEST |
|---|
| Calibration report |
| ATEX *(zone 2-22)* |
| Complies with the Eurasian Customs Union regulations for use in potentially explosive atmospheres |
| Complies with Chinese market regulations for use in potentially explosive atmospheres |

Rev. 0.0

# AU

## SINGLE-POINT LOAD CELL for platforms 250x400/400x600 mm

### DIMENSIONS (mm)

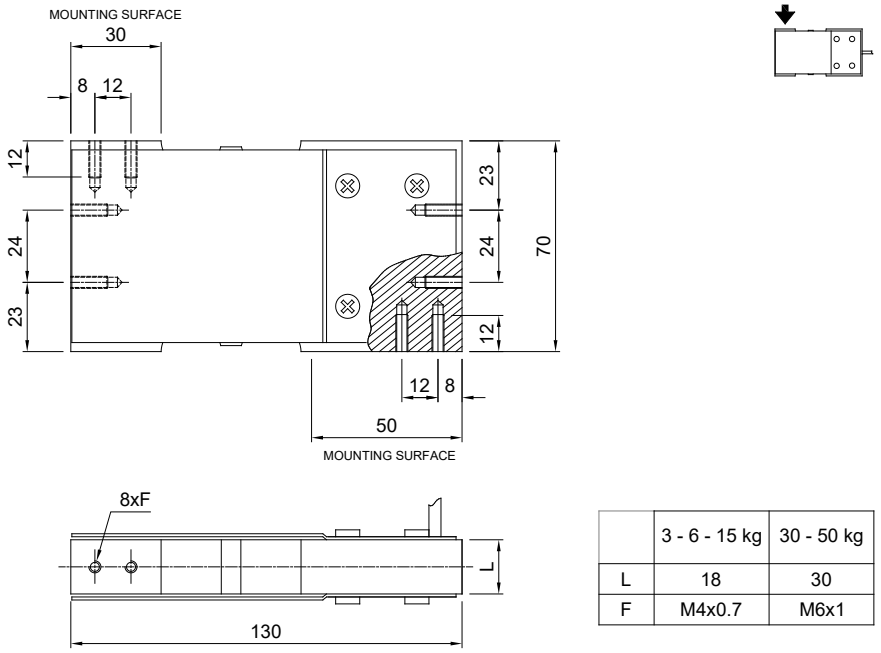


| | 3 - 6 - 15 kg | 30 - 50 kg |
|---|---|---|
| L | 18 | 30 |
| F | M4x0.7 | M6x1 |

For the load cell fixing screws, provide the tightening torque indicated in the table

| Screw | M4 | | M6 | |
|---|---|---|---|---|
| Screw class | 6.8 | 8.8 | 6.8 | 8.8 |
| Tightening torque | 2.2 Nm | 3 Nm | 7.5 Nm | 10 Nm |

### TECHNICAL FEATURES

| | |
|---|---|
| Material | Aluminum alloy |
| Nominal load (E max) | 3 - 6 - 15 - 30 - 50 kg |
| Combined error | ≤ ±0.02% |
| Protection rating | IP65 |

| | | | |
|---|---|---|---|
| Rated output | 2 mV/V ±10% | Input resistance | 410 Ω ±10 |
| Temperature effect on zero | 0.0025% °C | Output resistance | 350 Ω ±3 |
| Temperature effect on span | 0.0025% °C | Zero balance | ±2% |
| Compensated temperature range | -10 °C / +40 °C | Insulation resistance | >2000 MΩ |
| Operating temperature range | -20 °C / +60 °C | Safe overload (% of full scale) | 120% |
| Creep at nominal load in 30 minutes | 0.025% | Ultimate overload (% of full scale) | 200% |
| Max supply voltage without damage | 15 V | Deflection at nominal load | 0.5 mm |

### ELECTRICAL CONNECTIONS

| | |
|---|---|
| Cable length | 3 m |
| Cable diameter | 4 mm |
| Cores | 4 x 0.20 mm² |

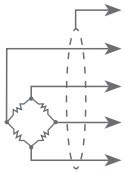

| | |
|---|---|
| SHIELD | |
| + SIGNAL | GREEN |
| + EXCITATION | RED |
| - SIGNAL | WHITE |
| - EXCITATION | BLACK |

Rev. 0.0

*The Company reserves the right to make changes to the technical data, drawings and images without notice.*

LAUMAS S.r.l.
Fax: (+39) 0521 681091
• SALES DEPARTMENT: sales@laumas.it
• Phone: (+39) 0521 683124

ISO 9001
ISO 14001