# CBLS

## COMPRESSION LOAD CELLS - LOW PROFILE

Manufactured according to OIML R60 standards

### Capacity from 200000 kg to 750000 kg



- 17-4 PH STAINLESS STEEL
- COMBINED ERROR ≤ ±0.10%
- IP68 PROTECTION RATING

| CAPACITY kg | NET WEIGHT (kg) |
|---|---|
| 200000 | 20 |
| 300000 | 42 |
| 500000 | 60 |
| 750000 | 60 |

## CERTIFICATIONS

Complies with the Eurasian Customs Union regulations

Equivalent of the CE marking for the United Kingdom

| CERTIFICATIONS ON REQUEST |
|---|
| Calibration report |
| ATEX *(zone 2-22)* |
| ATEX/IECEx *(zone 1-21)* |
| Complies with the Eurasian Customs Union regulations for use in potentially explosive atmospheres |
| Complies with Chinese market regulations for use in potentially explosive atmospheres |

## OPTIONS ON REQUEST

| DESCRIPTION |
|---|
| Two redundant strain gauges Wheatstone bridges (350 Ω) with two output cables; for dual safety systems |

## COMPLEMENTARY ACCESSORIES

| DESCRIPTION | | | MODEL |
|---|---|---|---|
| Upper loading base. | Dimensions: | Maximum static load: | |
| | Ø119 mm; h=60 mm | 200000 kg | BOTTONE200 |
| | Ø198 mm; h=60 mm | 300000 kg | BOTTONE |
| | Ø198 mm; h=89 mm | 500000 - 750000 kg | BOTTONE750 |

# CBLS

## COMPRESSION LOAD CELLS - LOW PROFILE

LAUMAS®

### DIMENSIONS (mm)

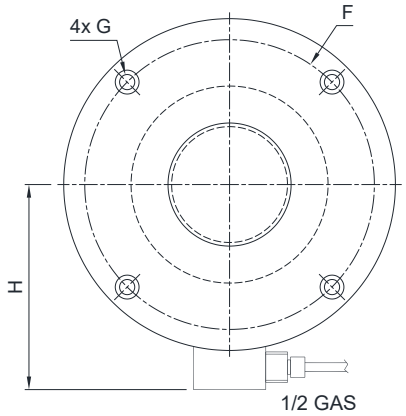


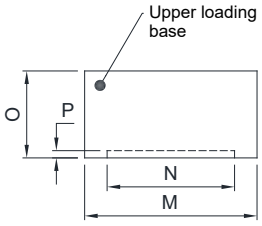


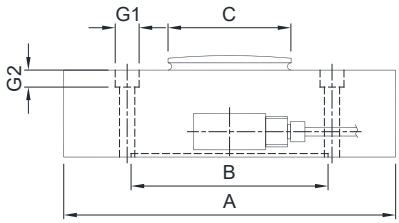


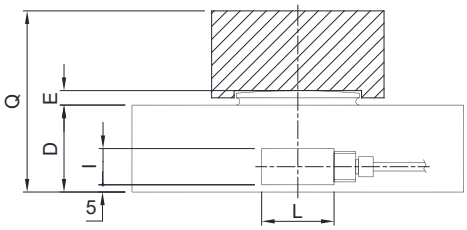


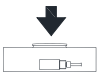

| | 200t | 300t | 500-750t |
|---|---|---|---|
| A | Ø229 | Ø299 | Ø299 |
| B | Ø136.5 | Ø228 | Ø230 |
| C | Ø87 | Ø155 | Ø155 |
| D | 60 | 73 | 106 |
| E | 10 | 12 | 14 |
| F | Ø200 | Ø260 | Ø260 |
| G | Ø10.5 | Ø12.5 | Ø12.5 |
| G1 | Ø16.5 | Ø18.5 | Ø18.5 |
| G2 | 10.5 | 12.5 | 12.5 |
| H | 142±1 | 180±2 | 180±2 |
| I | 30 | 25 | 25 |
| L | 60 | 50 | 50 |
| weight | 20kg | 42kg | 60kg |

| | 200t | 300t | 500-750t |
|---|---|---|---|
| M | Ø119 | Ø198 | Ø198 |
| N | Ø88 | Ø156 | Ø158 |
| O | 60 | 60 | 89 |
| P | 5 | 5 | 9 |
| Q | 125 | 140 | 200 |

### TECHNICAL FEATURES

| | |
|---|---|
| Material | 17-4 PH stainless steel |
| Nominal load (E max) | 200000 - 300000 - 500000 - 750000 kg |
| Combined error | ≤ ±0.10% |
| Protection rating | IP68 |

| | | | |
|---|---|---|---|
| Rated output | 2 mV/V ±0.1% | Input resistance | 700 Ω ±20 |
| Temperature effect on zero | 0.005% °C | Output resistance | 700 Ω ±5 |
| Temperature effect on span | 0.005% °C | Zero balance | ±1% |
| Compensated temperature range | -20 °C / +70 °C | Insulation resistance | >5000 MΩ |
| Operating temperature range | -30 °C / +90 °C | Safe overload (% of full scale) | 150% |
| Creep at nominal load in 30 minutes | 0.03% | Ultimate overload (% of full scale) | 300% |
| Max supply voltage without damage | 15 V | Deflection at nominal load | 0.4 mm |

### ELECTRICAL CONNECTIONS

| | |
|---|---|
| Cable length | 10 m |
| Cable diameter | 5 mm |
| Cores | 6 x 0.14 mm² |

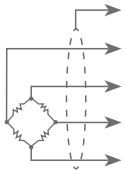

| | |
|---|---|
| SHIELD | |
| + SIGNAL | GREEN |
| + EXCITATION<br>+ REF./SENSE | RED<br>BLUE |
| - SIGNAL | WHITE |
| - EXCITATION<br>- REF./SENSE | BLACK<br>BROWN |

*The Company reserves the right to make changes to the technical data, drawings and images without notice.*


LAUMAS S.r.l. • SALES DEPARTMENT: sales@laumas.it
Fax: (+39) 0521 681091 • Phone: (+39) 0521 683124



ISO 9001
ISO 14001