TENDITORE300 - PTEND

Horizontal constraints for mounting kits

LAUMAS®

Up to 100000 kg application range



	DESCRIPTION		MODEL
	Galvanized steel turnbuckle with dual ball-and-socket.		
	Net weight:	2.10 kg	TENDITORE300
	Working load:	2500 kg	
	Ultimate overload:	10000 kg	
	Galvanized steel anchor plate for TENDITORE300		
	Net weight:	1.5 kg	PTEND

DIMENSIONS

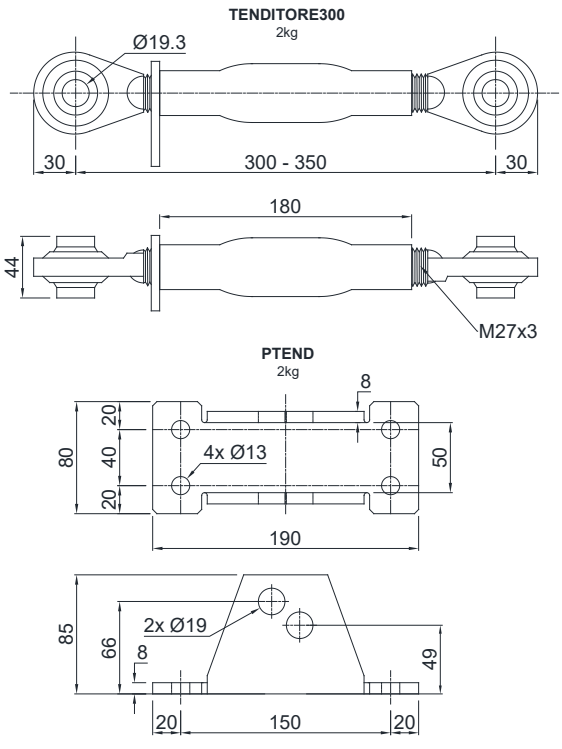

DESCRIPTION

- Suitable for static applications; place the constraints in a horizontal position.
- Turnbuckle lock for constraint adjustment.



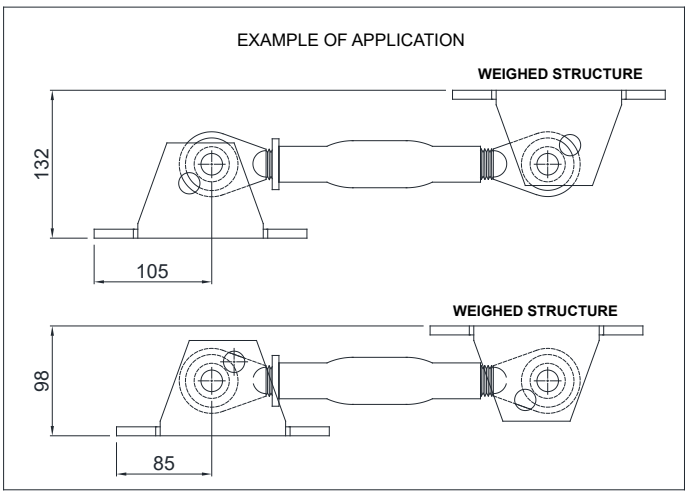

LAUMAS S.r.l.
Fax: (+39) 0521 681091
• SALES DEPARTMENT: sales@laumas.it
• Phone: (+39) 0521 683124

ISO 9001
ISO 14001

TENDITORE300 - PTEND

Horizontal constraints for mounting kits

LAUMAS®

APPLICATION EXAMPLE: HOW TO MAKE MOUNTING KITS WITH HORIZONTAL CONSTRAINTS

By a copper wire, connect the upper supporting plate with the lower supporting plate, then link together the lower plates to the earthing system.

To ensure the stability of the structure, the system designer must predict any further precaution against side shifts and anti-tilt in function of: knocks and vibrations, wind effect, seismic conditions and hardness of support structure.

Application example with column load cells

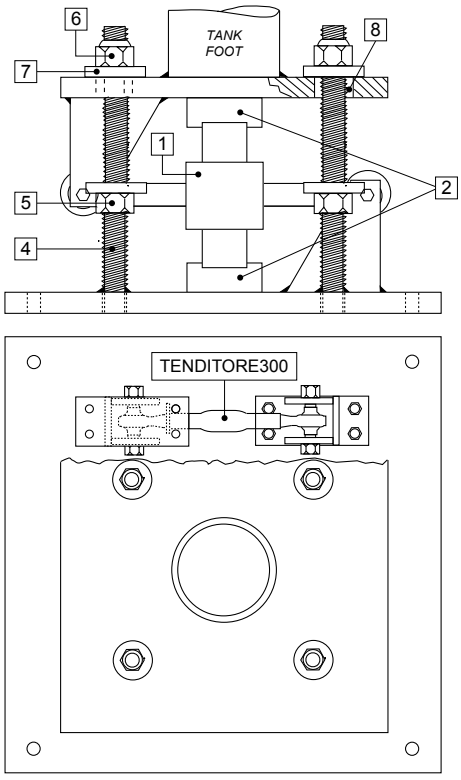

Application example with compression load cells

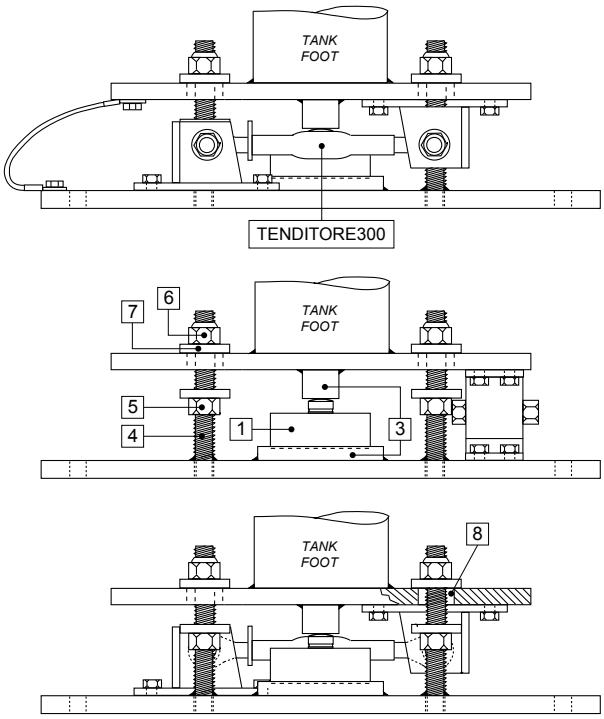

1. Load cell.
2. Mounting kit for column load cell.
3. AISI 304 stainless steel upper and lower bases.
4. Threaded rod.
5. Nut to be used as jack.
6. Anti-tilt self-locking nut.
7. Washer.
8. Hole diameter 20 mm larger than the bolt.

Application example with V15000 - V30000 - V100000 mounting kits

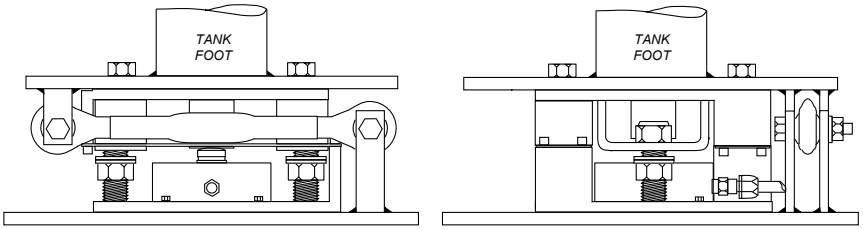

CONSTRAINTS PLACEMENT ON 3/4 SUPPORTS: the horizontal constraints can be positioned both on supports and on the four sides, centrally between two supports.

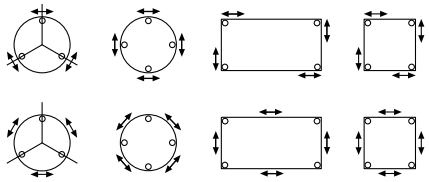

STRUCTURE WITH 3-POINT SUPPORT

1 CONSTRAINT FOR SUPPORT

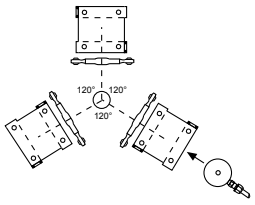

2 CONSTRAINTS FOR SUPPORT

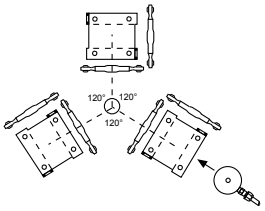

STRUCTURE WITH 4-POINT SUPPORT

1 CONSTRAINT FOR SUPPORT

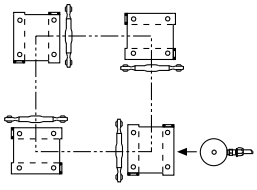

2 CONSTRAINTS FOR SUPPORT

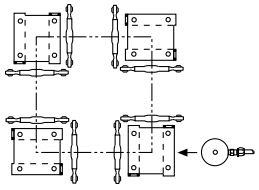

The Company reserves the right to make changes to the technical data, drawings and images without notice.

LAUMAS S.r.l. • SALES DEPARTMENT: sales@laumas.it
Fax: (+39) 0521 681091 • Phone: (+39) 0521 683124

ISO 9001
ISO 14001