ANTIV

Compression joint

LAUMAS®

Up to 2000 kg application range



MAX STATIC LOAD kg	FOR LOAD CELLS	DIMENSIONS	NET WEIGHT (kg)	MODEL
500	FCOL	M8x1.25	0.04	ANTIV35
2000	FTKL - FCAL - FCAX - FTP FT-P - FTK - FTZ - CLS	M12x1.75	0.1	ANTIV40
2000	FCAL - FCAX	M12x1.75	0.1	ANTIV45

DIMENSIONS AND APPLICATION

ANTIV35

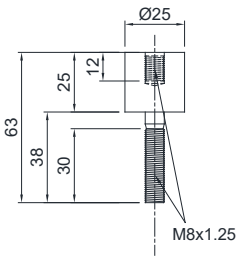

Max static load 500kg

ANTIV40

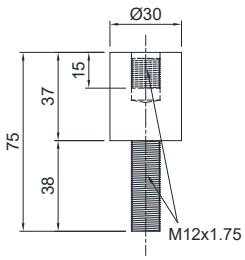

Max static load 2000kg

ANTIV45

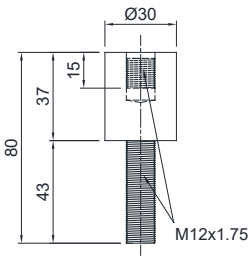

Max static load 2000kg

DESCRIPTION

- Stainless steel and rubber compression joints to compensate for any misalignments of the support plates.
- Can be used for systems with at least 3 supports.

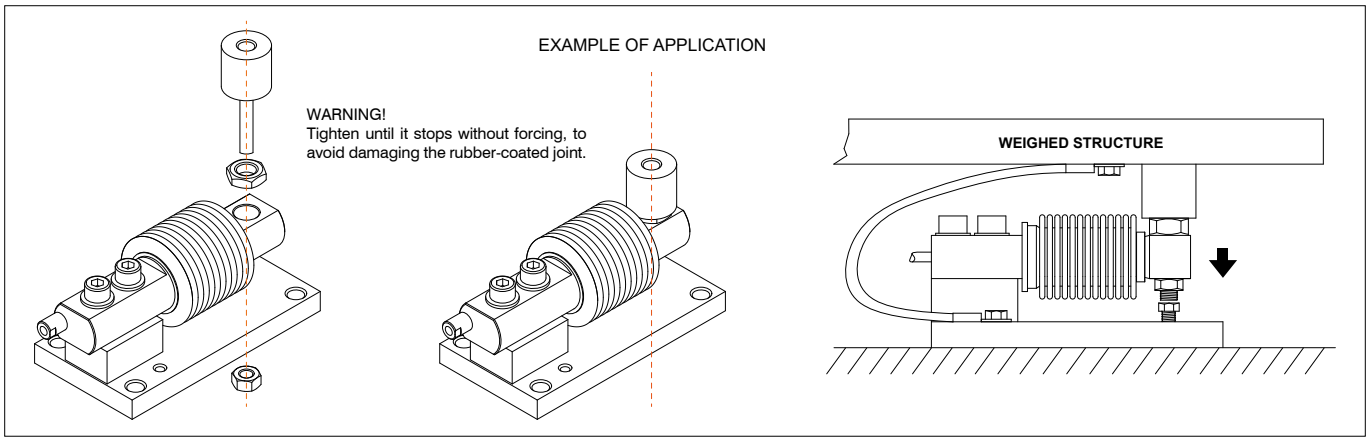

The Company reserves the right to make changes to the technical data, drawings and images without notice.

Rev. 0.0

LAUMAS S.r.l.
Fax: (+39) 0521 681091
• SALES DEPARTMENT: sales@laumas.it
• Phone: (+39) 0521 683124

ISO 9001
ISO 14001

www.laumas.com