PTC

SINGLE-POINT LOAD CELL for platforms 400x400 mm

Manufactured according to OIML R60 standards

Capacity from 30 kg to 150 kg



- AISI 420 STAINLESS STEEL
- COMBINED ERROR ≤ ±0.02%
- IP67 PROTECTION RATING

CAPACITY kg	PLATFORM (mm)	NET WEIGHT (kg)
30	400 x 400	0.75
50	400 x 400	0.75
75	400 x 400	0.75
100	400 x 400	0.75
150	400 x 400	0.75

CERTIFICATIONS

Complies with the Eurasian Customs Union regulations

Equivalent of the CE marking for the United Kingdom

CERTIFICATIONS ON REQUEST	
	Calibration report
	ATEX *(zone 2-22)*
	Complies with the Eurasian Customs Union regulations for use in potentially explosive atmospheres
	Complies with Chinese market regulations for use in potentially explosive atmospheres

PTC

SINGLE-POINT LOAD CELL for platforms 400x400 mm

LAUMAS®

DIMENSIONS (mm)

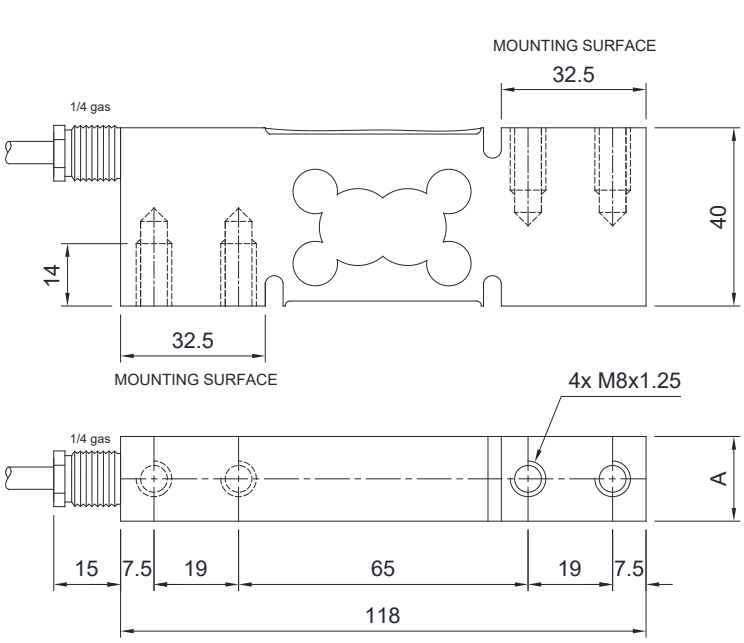

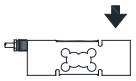

kg	30÷100	150
A	19	25

For the load cell fixing screws, provide the tightening torque indicated in the table

Screw	M8	
Screw class	6.8	8.8
Tightening torque	19 Nm	25 Nm

TECHNICAL FEATURES

Material	AISI 420 stainless steel
Nominal load (E max)	30 - 50 - 75 - 100 - 150 kg
Combined error	≤±0.02%
Protection rating	IP67

Rated output	2 mV/V ±10%	Input resistance	385 Ω ±30
Temperature effect on zero	0.002% °C	Output resistance	350 Ω ±5
Temperature effect on span	0.002% °C	Zero balance	±1%
Compensated temperature range	-10 °C / +40 °C	Insulation resistance	>5000 MΩ
Operating temperature range	-20 °C / +60 °C	Safe overload (% of full scale)	150%
Creep at nominal load in 30 minutes	0.02%	Ultimate overload (% of full scale)	300%
Max supply voltage without damage	15 V	Deflection at nominal load	0.3 mm

ELECTRICAL CONNECTIONS

Cable length	3 m
Cable diameter	4 mm
Cores	6 x 0.20 mm²

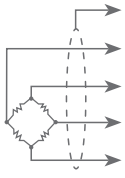

SHIELD	
+ SIGNAL	GREEN
+ EXCITATION + REF./SENSE	RED BLUE
- SIGNAL	WHITE
- EXCITATION - REF./SENSE	BLACK YELLOW

The Company reserves the right to make changes to the technical data, drawings and images without notice.

LAUMAS S.r.l. • SALES DEPARTMENT: sales@laumas.it
Fax: (+39) 0521 681091 • Phone: (+39) 0521 683124

ISO 9001
ISO 14001