ANTIVM

Vibration isolators

LAUMAS®

Up to 5000 kg application range



ANTIVM12

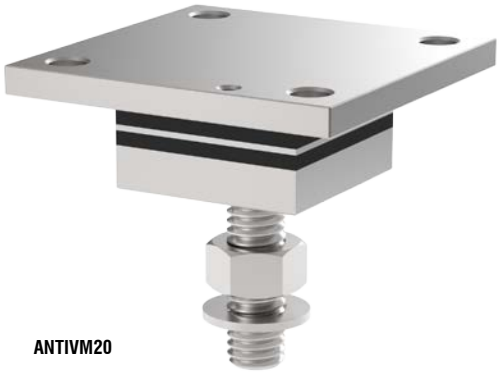

ANTIVM20

MAX STATIC LOAD kg	FOR LOAD CELLS	THREAD	MODEL
2000	FCAL, FCAX, FTK, FTKL, FTP, FT-P, FTZ	M12x1.75	ANTIVM12
5000	FTK, FTP, FTZ	M20x2.5	ANTIVM20

Nuts and washers included.

DIMENSIONS

ANTIVM12

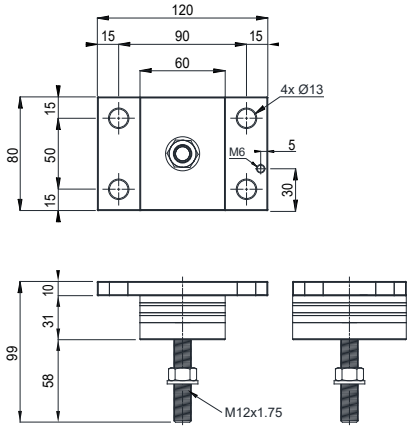

ANTIVM20

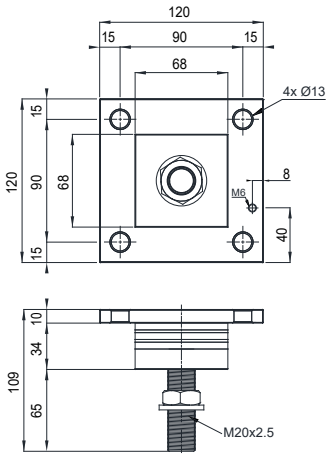

DESCRIPTION

- Vibration isolator in AISI 304 stainless steel and NBR rubber to compensate for any misalignments of the support plates.
- Can be used for systems with at least 3 supports.

Rev. 0.0

The Company reserves the right to make changes to the technical data, drawings and images without notice.