RIPDOSMANHA

REMOTE DISPLAY FOR WR SERIES INSTRUMENTS



DESCRIPTION

- Remote display for connection to WR instruments, suitable for wall mounting.
- Semi-alphanumeric red LED display, two-line by 8-digit (57 mm height).
- Plastic box.
- IP56 protection rating.
- Serial ports for transmission protocol.
- Enables the operator to perform a guided manual batching: the first line indicates the formula's number and the gross weight; the second line indicates the product's number and the quantity to be batched, that decreases to zero during the product loading.

DIEMENSIONS

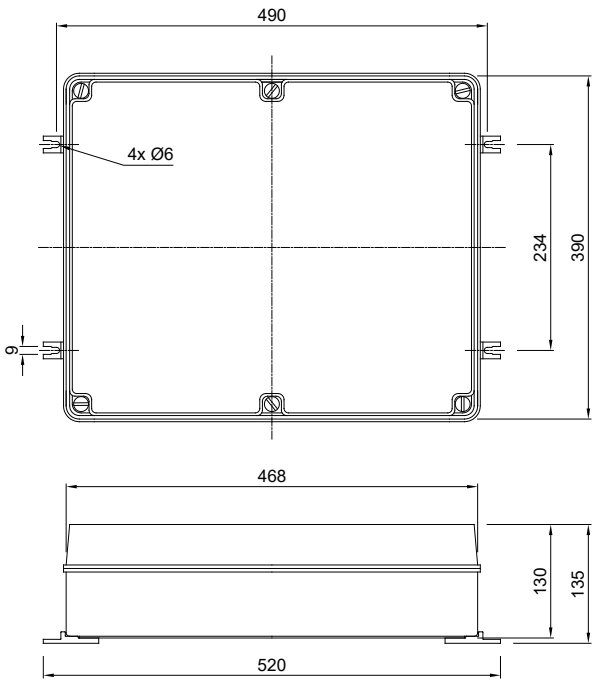

TECHNICAL FEATURES

Power supply and consumption	12÷24 VDC; 30 W
Serial ports	RS232, RS422
Baud rate	1200, 2400, 4800, 9600, 19200, 38400, 57600 (bit/s)
Humidity (condensate free)	85%
Storage temperature	-20 °C ÷ +50 °C
Working temperature	-10 °C ÷ +40 °C

CERTIFICATIONS

UK CA Equivalent of the CE marking for the United Kingdom

Rev. 0.0

LAUMAS S.r.l.
Fax: (+39) 0521 681091
• SALES DEPARTMENT: sales@laumas.it
• Phone: (+39) 0521 683124

Remote displays

PRODUCTS OVERVIEW







MODEL	RIPLED5100	RIP550SHA	RIPDOSMANHA
Power supply and consumption	12÷24 VDC; 20 W	12÷24 VDC; 10 W	12÷24 VDC; 30 W
Serial ports	RS232/RS422	RS232/RS485	RS232/RS422
Dimensions	468x390x130 mm	310x230x130 mm	468x390x130 mm
Baud rate	1200, 2400, 4800, 9600, 19200, 38400, 57600 (bit/s)	1200, 2400, 4800, 9600, 19200, 38400, 57600 (bit/s)	1200, 2400, 4800, 9600, 19200, 38400, 57600 (bit/s)
Humidity (condensate free)	85%	85%	85%
Storage temperature	-20 °C ÷ +50 °C	-20 °C +50 °C	-20 °C ÷ +50 °C
Working temperature	-10 °C ÷ +40 °C	-10 °C +40 °C	-10 °C ÷ +40 °C
Protection rating	IP56	IP56	IP56





MODEL	RIP6100IP65	RIP6100N
Power supply and consumption	110÷240 VAC; <10 VA	12 VDC; 1.5 A
Serial ports	RS232/RS485	RS232/RS485
Dimensions	745x160x50 mm	712x208.5x46.5 mm
Baud rate	9600 (bit/s)	9600 (bit/s)
Humidity (condensate free)	85%	80%
Storage temperature	-20 °C +60 °C	-10 °C +60 °C
Working temperature	-10 °C +50 °C	-10 °C +50 °C
Protection rating	IP65	IP30

The Company reserves the right to make changes to the technical data, drawings and images without notice.

LAUMAS S.r.l.
Fax: (+39) 0521 681091
• SALES DEPARTMENT: sales@laumas.it
• Phone: (+39) 0521 683124

ISO 9001
ISO 14001