TAIPAN365

LOSS-IN-WEIGHT WEIGHING SYSTEM

LAUMAS®

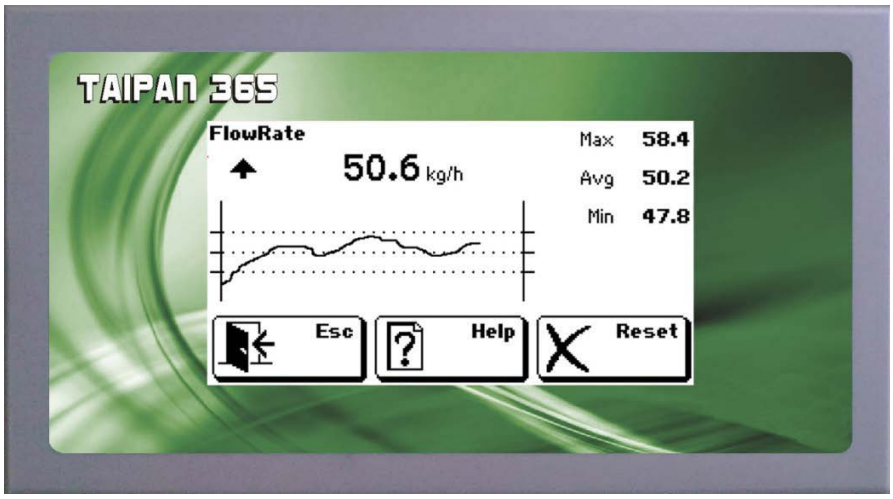

DESCRIPTION

- Loss-in-weight regulator suitable for front panel mounting.
- Dimensions: 196x105x100 mm (drilling template: 187x97 mm)
- Touch screen LCD display.
- IP65 front panel protection rating.
- The TAIPAN365 not only integrates weight and speed variables but also generates the instantaneous flow rate per hour, total weight and the function of automatic flow rate regulator function.

On request:

- Profibus, PROFINET IO, Ethercat, Ethernet TCP/IP and Ethernet IP protocols.
- Separate module for an additional analogue input and output.
- USB host for USB pen drive.

INPUTS/OUTPUTS AND COMMUNICATION

- RS232/RS422/RS485 serial port for communication via ModBus RTU and ASCII protocols.
- 6 relay outputs.
- 6 optoisolated PNP digital inputs.
- 1 load cell dedicated input.
- Current or voltage 16 bit analog output.

MAIN FUNCTIONS

- Maintaining the setpoint flow by adjusting IP analog output, with an alarm output of flow out of tolerance.
- Continuous transmission of the instantaneous flow rate, detected by analog output proportional to it.
- Ability to set, for batching, the values of preset, set and fall with pulse outputs to the achievement of values.
- Possibility of setting of the setpoint via analog input; optional extra analog output in addition to the standard output.
- Save points for the working curve of the doser when used in combination with with non-linear extractors (eg electromagnetic extractor).
- Calculation of total weight of the batched material and transmission through pulse output; ability to drive a 24-column printer via RS232.
- Programming of up to 15 different setpoints of work, settable by BCD inputs.
- Able to freeze the analog output value, by means of logic input, in order to avoid the initial pendulation of system (which runs all 15 setpoints).
- Ability to display, during operation, I/O status, the current weight, current speed, encoder pulses and the correction factor set.
- Procedures for the zero setting on working loaded belt and automatic adjustment factor correction.
- Can be connected with PC/PLC using comunication protocols ASCII and Modbus-RTU (on request: Profibus, PROFINET IO, Ethercat, Ethernet TCP/IP and Ethernet IP).

CERTIFICATIONS

UK CA Equivalent of the CE marking for the United Kingdom

LAUMAS S.r.l. • SALES DEPARTMENT: sales@laumas.it
Fax: (+39) 0521 681091 • Phone: (+39) 0521 683124

ISO 9001
ISO 14001

TAIPAN365

LOSS-IN-WEIGHT WEIGHING SYSTEM

APPLICATION DIAGRAM

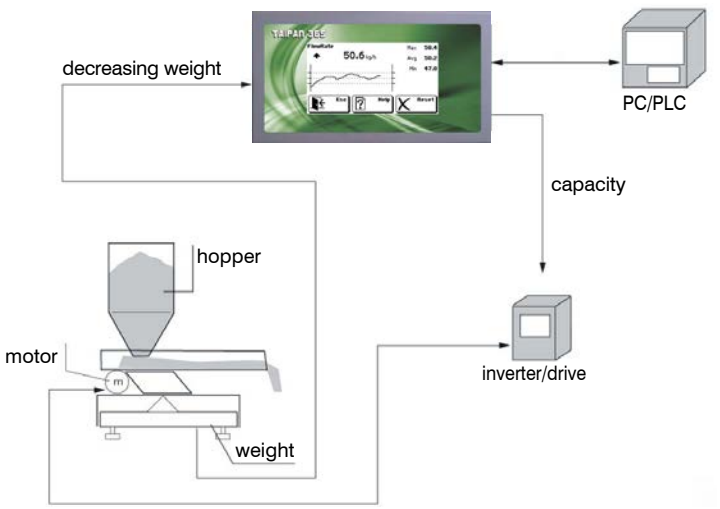

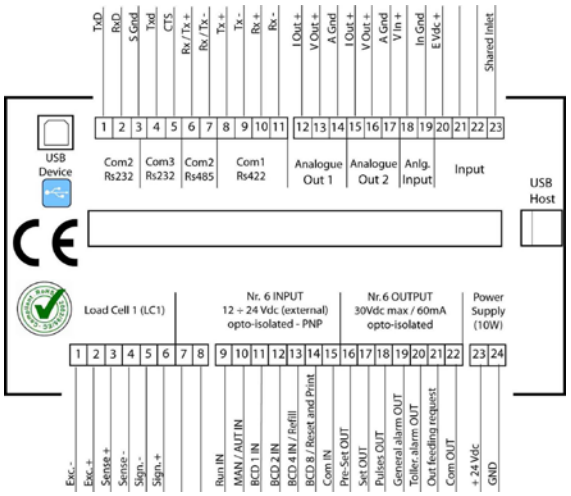

TECHNICAL FEATURES

Power supply and consumption	24 VDC; 10 W
CPU - Micro controller	RISC 32 bit - 44 MHz
Number of load cells in parallel • Load cells supply	up to 8 (350 Ω) • 5 VDC/120 mA
A/D Converter	24 bit
Display resolution	10000
Internal resolution	600000
Display increments	x1 x2 x5 x10
Relay outputs	6 - 30 VDC/60 mA
Optoisolated digital inputs	6 - 12÷24 VDC PNP
Serial ports	RS232/RS485/USB Device, Ethernet
Analog outputs	16 bit
Analogue input	24 bit
Humidity (condensate free)	85%
Storage temperature	-20 °C +60 °C
Working temperature	-10 °C +50 °C

The Company reserves the right to make changes to the technical data, drawings and images without notice.

LAUMAS S.r.l. • SALES DEPARTMENT: sales@laumas.it
Fax: (+39) 0521 681091 • Phone: (+39) 0521 683124

ISO 9001
ISO 14001