EM

Ball-and-socket joints with nut



For TENSION (COMPRESSION) load cells

THREAD	MATERIAL	STATIC LOAD RATINGS kN	NET WEIGHT (kg)	MODEL
M12	stainless steel	24.5	0.08	EM-INOX
M16		45	0.19	
M20		60	0.30	
M24		83	0.60	
M6	galvanized C40 steel	8.1	0.02	EM
M8		12.9	0.04	
M10		17.6	0.06	
M12		24.5	0.08	
M16		45	0.19	
M20		60	0.30	
M24		83	0.60	
M30		110	0.93	
M36		146	1.45	

DIMENSIONS

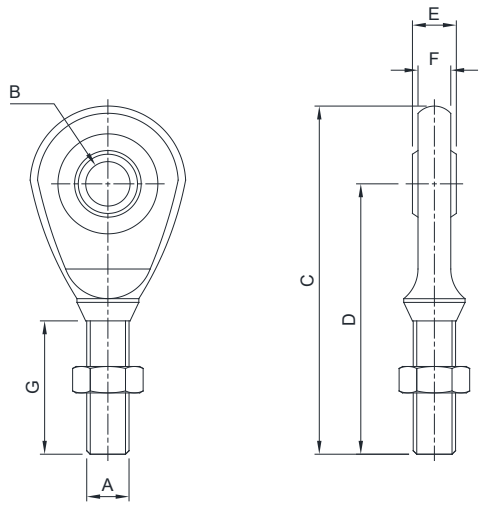

stainless steel

A	B	C	D	E	F	G
M12x1.75	Ø12	72	55	10	8.5	28
M16x2	Ø17	88.5	65.5	14	11.5	36
M20x1.5	Ø20	104	77	16	13.5	43
M24x2	Ø25	124	92	20	18	53

galvanized C40 steel

M6x1	Ø6	47	36.5	6	4.5	18
M8x1.25	Ø8	54	42.5	8	6.5	22
M10x1.5	Ø10	62.5	48.5	9	7.5	26
M12x1.75	Ø12	71	54.5	10	8.5	28
M16x2	Ø17	92	69.5	14	11.5	36
M20x1.5	Ø20	104.5	77.5	16	13.5	43
M24x2	Ø25	126	94.5	20	17.5	53
M30x2	Ø30	146.5	110	22	19.5	65
M36x3	Ø35	181	140	25	21.5	82

The Company reserves the right to make changes to the technical data, drawings and images without notice.

LAUMAS S.r.l.
Fax: (+39) 0521 681091
• SALES DEPARTMENT: sales@laumas.it
• Phone: (+39) 0521 683124

ISO 9001
ISO 14001