MPROFI

PROFIBUS DP CONVERTERS



		MODEL
1 Instrument	1 instrument connected to the converter	MPROFIUNO
2 Instruments	2 instruments connected to the converter	MPROFIDUE

DESCRIPTION

- MPROFI converters allow to connect 1 or 2 Laumas instruments in Slave configuration to any PROFIBUS DP master system via RS422/RS485 port.
- The configuration file allows to choose which SW-Modules to use in the automation SW for each Laumas instruments.
- Configurable protocol registers allow reading/writing of: setpoints, formulas, alarms, working states, gross and net weight, digital inputs and outputs, totals and nets resulting from a instrument batching.
- Dimensions: 71x58x90 mm.
- IP40 protection rating.
- Indicator LED indicating the communication status in the Profibus network.
- Mounting on Omega/DIN rail.
- 12-24 VDC supply screw terminals.

INPUTS/OUTPUTS AND COMMUNICATION

- RS422/RS485 serial port (D-SUB 9P male) for communication to Laumas instruments.
- PROFIBUS DP serial port (D-SUB 9P female) for instruments connection to PROFIBUS DP network.

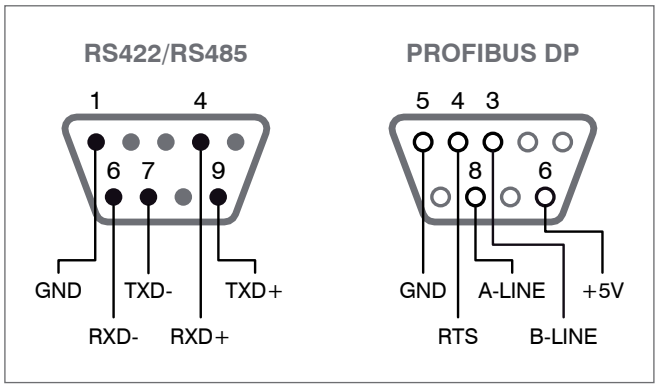

CERTIFICATIONS

UK CA Equivalent of the CE marking for the United Kingdom

LAUMAS S.r.l.
Fax: (+39) 0521 681091
• SALES DEPARTMENT: sales@laumas.it
• Phone: (+39) 0521 683124

MPROFI

PROFIBUS DP CONVERTERS

LAUMAS®

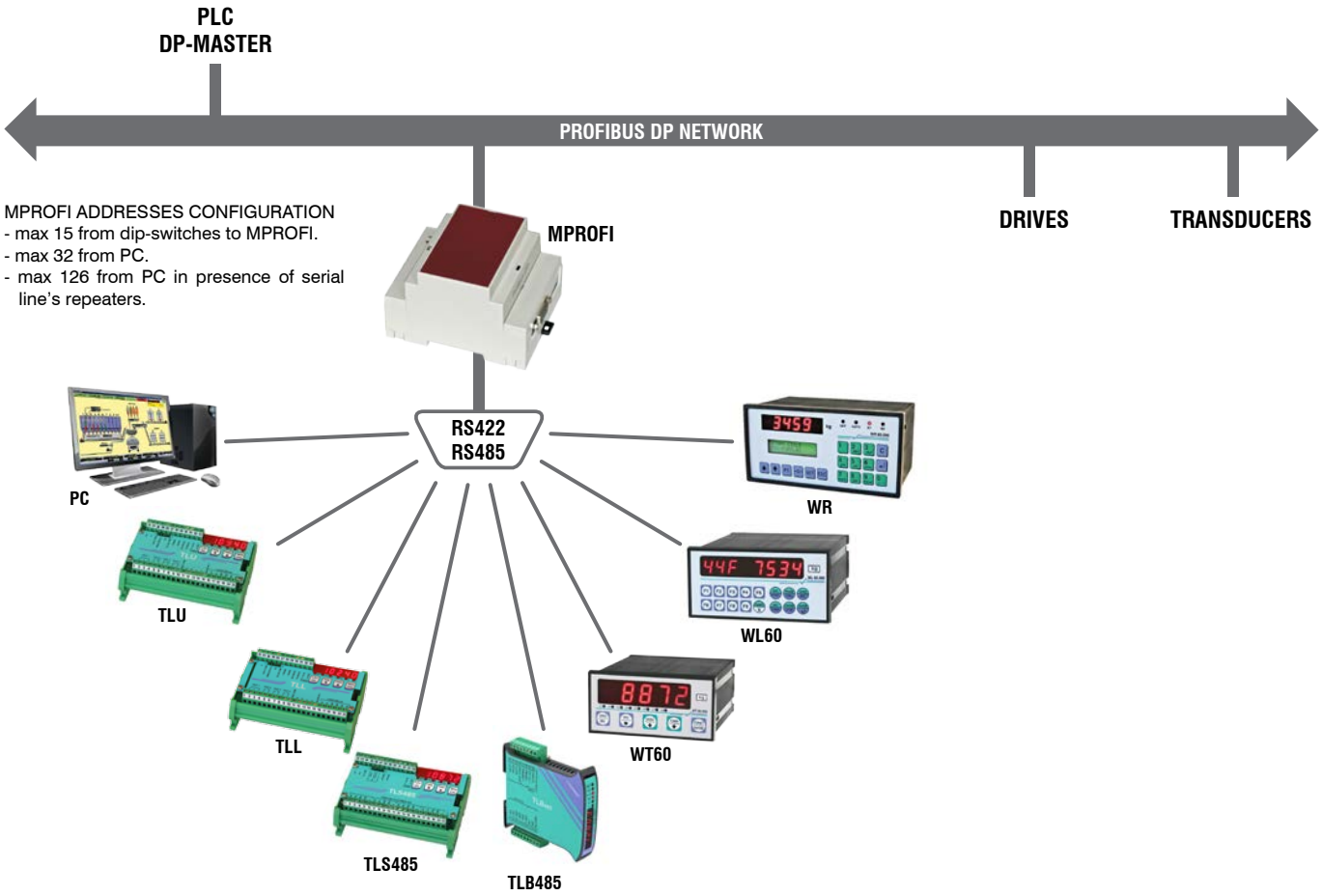

TECHNICAL FEATURES

Power supply and consumption	12÷24 VDC ±15%; 2 W (80 mA - 24 VDC)
D-SUB 9P male serial port	RS422, RS485
Baud rate	9600 - 115200 (bit/s)
Cable length	1200 mm/9600 (bit/s)
D-SUB 9P female serial port	PROFIBUS DP
Baud rate	≤12 (Mbit/s)
Cable length	1200 mm / 9600 (bit/s)
Humidity (condensate free)	85%
Storage temperature	-20°C +50°C
Working temperature	-10°C +40°C

The Company reserves the right to make changes to the technical data, drawings and images without notice.

LAUMAS S.r.l.
Fax: (+39) 0521 681091
• SALES DEPARTMENT: sales@laumas.it
• Phone: (+39) 0521 683124

ISO 9001
ISO 14001